NOTES:

1) CLOSED CELL EPDM SPONGE RUBBER (0.750 G/CM^3)

2) 70 DUROMETER EPDM DENSE RUBBER (1.200 G/CM^3)

3) 1/2" ST-1200 3M HEAT ACTIVATED TAPE (0.010 LB/FT)

4) ANTI-STICK COATING

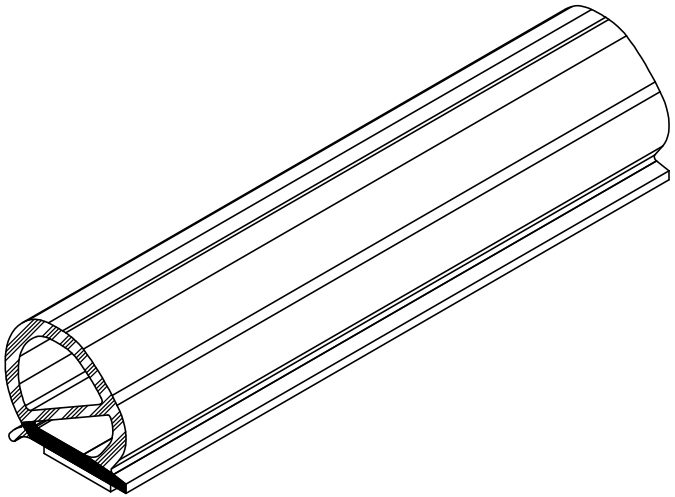

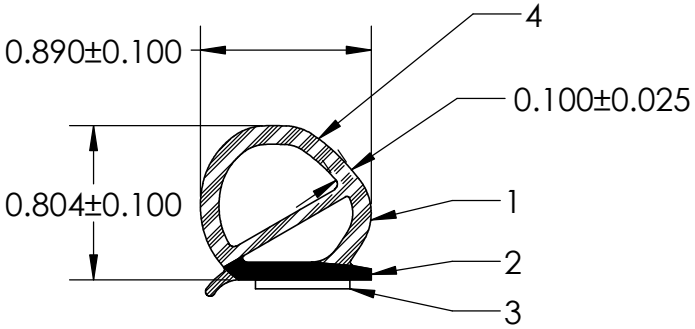

UNI-GRIP, INC.
9823 STATE ROUTE 53 N
UPPER SANDUSKY, OHIO 43351

REVISION BLOCK

REV.	DATE	REVIEWED BY	CHANGES MADE
A	9/3/19	G.S.	REMOVED VENT HOLE PER CUSTOMER
B			
C			
D			
E			

PROPRIETARY AND CONFIDENTIAL:

THE INFORMATION CONTAINED IN THIS DRAWING IS THE SOLE PROPERTY OF UNI-GRIP,INC. ANY REPRODUCTION IN PART OR AS A WHOLE WITHOUT THE WRITTEN PERMISSION OF UNI-GRIP,INC. IS PROHIBITED.

DOCUMENT CONTROL NUMBER
UG-1-EN-001-FR-(103018)

UNLESS OTHERWISE SPECIFIED:

DIMENSIONS ARE IN INCHES
TOLERANCES PER ARPM CLASS 3

WEIGHT 0.123 LB/FT

ASTM D1056 2A3

ASTM D2000 3BA711 A14 B13 C12 F17

TITLE: DU-092

SIZE A | DWG. NO. UG-1-DU-500-TP-092 | REV A

P:\Engineering\Prints\Dual Durometer\DU-092 UG-1-DU-500-TP-092

SCALE: 1:1

DR. BY C. VENT | DATE 9/3/2019 | SHEET 1 OF 1

5 4 3 2 1