NOTES:

1) CLOSED CELL EPDM SPONGE RUBBER (0.700 G/CM^3)

2) 70 DUROMETER EPDM DENSE RUBBER (1.200 G/CM^3)

3) 1.00" WIRE CARRIER (0.021LB/FT)

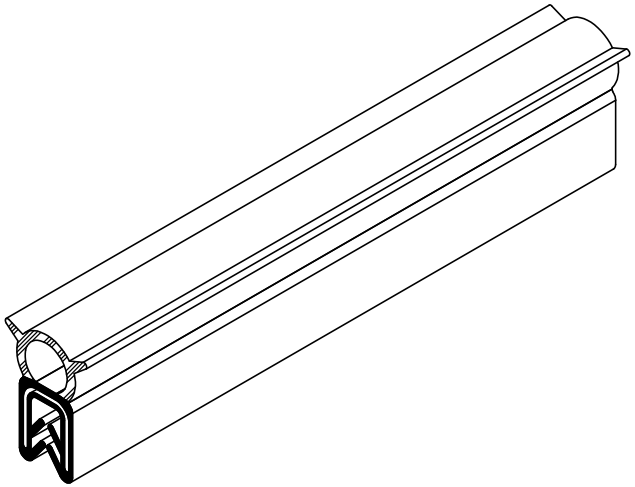

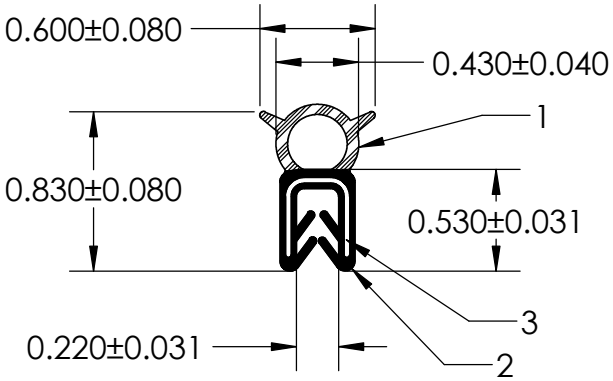

CUT LENGHT	TOLERANCE
7.598"	+/- 0.125"

UNI-GRIP, INC.
9823 STATE ROUTE 53 N
UPPER SANDUSKY, OHIO 43351

REVISION BLOCK

REV.	DATE	REVIEWED BY	CHANGES MADE
A			
B			
C			
D			
E			

PROPRIETARY AND CONFIDENTIAL:

THE INFORMATION CONTAINED IN THIS DRAWING IS THE SOLE PROPERTY OF UNI-GRIP,INC. ANY REPRODUCTION IN PART OR AS A WHOLE WITHOUT THE WRITTEN PERMISSION OF UNI-GRIP,INC. IS PROHIBITED.

DOCUMENT CONTROL NUMBER
UG-1-EN-001-FR-(103018)

UNLESS OTHERWISE SPECIFIED:

DIMENSIONS ARE IN INCHES
TOLERANCES PER ARPM CLASS 3

WEIGHT 0.115 LB/FT

ASTM D1056 2A4

ASTM D2000 3BA711 A14 B13 C12 F17

TITLE: DU-127

SIZE A

DWG. NO. UG-1-DU-1000-WR-127

REV

P:\Engineering\Prints\Dual Durometer\ET-127 UG-1-DU-1000-WR-127

SCALE: 1:1

DR. BY C. VENT

DATE 1/7/2020

SHEET 1 OF 1

5 4 3 2 1